HELLER

Instruction Manual

40cm Misting Fan with Remote Control

Model: HMIST40R

READ AND SAVE THESE INSTRUCTIONS

Please read and follow the instructions in this user manual even if you feel you are familiar with the product, and find a place to keep it handy for future reference.

For your convenience record the complete model number (located on the product identification plate) and the date you received the product, together with your purchase receipt and attach to the warranty and service information. Retain in the event that warranty service is required.

NOTE: The rating of this product (as marked on the product identification plate) is based on specific loading tests. Normal use or the use of other recommended attachments may draw significantly less power.

IMPORTANT SAFEGUARDS

When using any electrically powered product, basic safety precautions should always be followed, including the following:

PLEASE READ ALL INSTRUCTIONS CAREFULLY BEFORE USING THIS PRODUCT

WARNING!: - to reduce the risk of fire, electrical shock or injury to persons or property:

- Always operate the product from a power source of the same voltage, frequency and rating as indicated on the product identification plate.
- Remove the unit from its packaging and check to make sure it is in good condition before using. Do not let children play with parts of the packaging (such as plastic bags).
- Close supervision is necessary when the product is used by or near children or infirm persons.
- Do not allow children to use it as a toy.
- Do not operate any product with a damaged cord or plug, or after the product malfunctions, or is dropped or appears damaged in any way. Return the complete product to the place of purchase for inspection, repair or replacement.
- Before unplugging the plug, be sure to turn the power off. When touching the unit, be sure your hands are dry to prevent electrical shock.
- Never install the unit where it is exposed to direct sunlight, excessive moisture/rain, dust and lack of ventilation near any heat sources.
- Avoid making contact with moving parts. Never insert fingers, pencils or any other objects through the guards whenever the power plug is connected, especially while the unit is working.
- Always place the fan on a stable, level surface when operating to prevent the fan from overturning. Do not run the power cord under carpet. Do not cover the power cord with throw rugs or runners. Route the power cord away from walking paths so that nobody can trip over it. The cable should be kept away from heat, sharp edges and oil.
- To reduce the risk of electric shock, do not immerse or expose the product or flexible cord to rain, moisture or any liquid other than those necessary for correct operation of the product.
- This product should not be used in the immediate vicinity of water, such as bathtub, washbowls,
- bathroom swimming pool etc. Where the likelihood of immersion or splashing could occur.
- Switch off and unplug from outlet when not in use, before assembling or disassembling parts and Before cleaning. Remove by grasping the plug - do not pull on the cord.
- Be sure that no other high current appliances are plugged into the same circuit as your fan, as an
- overload can occur.
- Avoid the use of an extension cord as the extension cord may overheat and cause a risk of fire.
- Do not use the appliance for other than its intended use.
- Do not use outdoors. **FOR INDOOR USE ONLY.**
- Do not leave the appliance unattended when switched on.
  Do not cover the grill, or operate in close proximity to curtains etc.
- The use of attachments or accessories not recommended or sold by the product distributor may cause personal or property hazards or injuries.
  This product is intended for normal domestic/household use only.
- Ensure that the fan is switched off from the supply mains before removing the guard.
- Use this fan as described in this manual. Any other uses, not recommended by the manufacturer, May cause fire, electric shock, or injury to persons and may void the warranty.
  This appliance is not intended for use by persons (including children) with reduced physical, Sensory or mental capabilities, or lack of experience and knowledge, unless they have been given
- supervision or instruction concerning the use of the appliance by a person responsible for their
- safety.
  Do not leave the fan running unattended.
  WARNING: If the supply power cord is damaged, the power cord must be replaced by the
- manufacturer, its service agent or similarly qualified persons in order to avoid a hazard.
  This product has not been designed for any uses other than those specified in this booklet.
  CAUTION: Never insert your fingers or any other objects (hair, clothes, utensils, knives, screw
- drivers etc.) into the openings of the guard or close to the blade when the appliance is connected
- to the power supply.
  CAUTION: DO NOT COVER the appliance in any way in order to avoid overheating and fire.
  CAUTION - RISK OF ELECTRIC SHOCK: To reduce the risk of electric shock do not open this device, there are not serviceable parts for customers. Please refer any maintenance or repair to qualified personnel.

SAVE THESE INSTRUCTIONS

PARTS & FEATURES

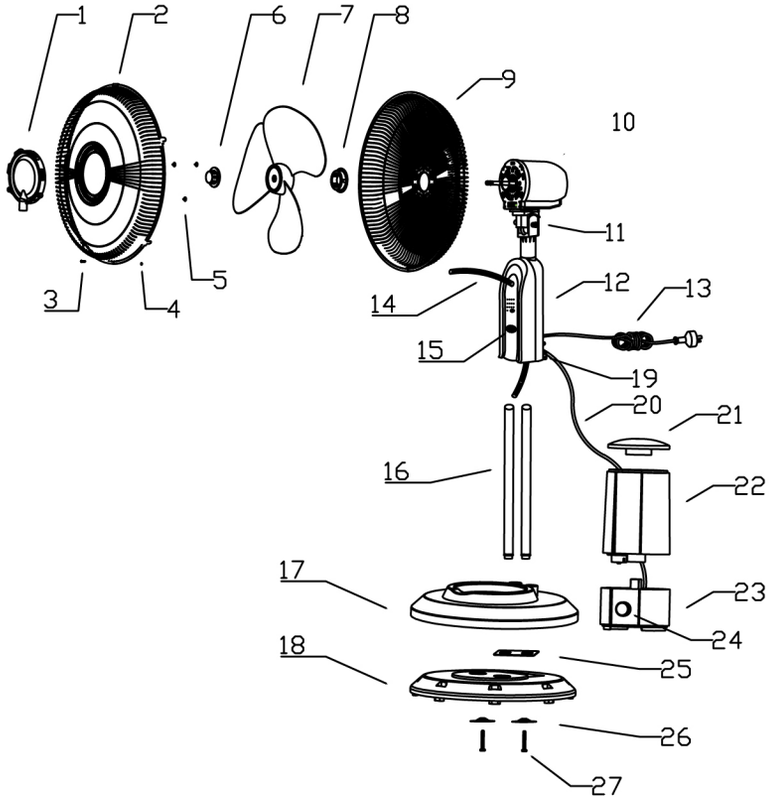

1.Mist Ring	10.Motor Housing	19.Hand for Column
2.Front Guard	11.Neck	20.Lead Wire
3.Safe Screw	12.Body	21.Water Tank Cover
4.Safe Nut	13.Power Cord	22.Water Tank
5.Mist Ring Screw	14.Bellows	23.Atomizer
6.Blade Lock	15.Button	24.Atomizer Knob
7.Blade	16.Two Columns	25.Fixed Column
8.Guard Lock	17.Base Cover	26.Lock Plate
9.Rear Guard	18.Weight Base	27.Base Screw

BEFORE FIRST USE

Before use, remove all packaging and inspect the appliance for any damage. If there appears to be any damage, please take the unit back to place of purchase for a replacement.

ASSEMBLY INSTRUCTIONS

1. Open the fan of packing to go examine the integrity of parts as above diagram;
2. Put the fixed column (25) on the weight base (18) after setting the base cover (17) on the weight base (18). Correct the four holes (fixed column
3. hole and weight base hole) to allow the column to be easily inserted. Insert the two columns (16) through fixed column (25) to weight base (18).
4. Put lock plate (26) at the bottom of base, tightening the base screw (27) to allow the column (16) and base, and fixed column combine together.
5.
6. Put down the base cover (17) to let the weight base merge into one. Put the water tank (22) on atomizer (23), then fill the water tank cover (21); (You can take in water from the bottom of water tank before put it on the atomizer).
7. Install the body (body together with motor cover before factory packing) to the two columns and tight screw the body together.
8. Mount the rear guard (9) to the motor housing (10).
9. The motor shaft has the blade lock (6) and guard lock (8) attached. Remove the lock by turning it clockwise and the nut by turning it
10. anticlockwise.
    Place the rear guard (9) on the front of the motor housing (10), lining up the two positioning knobs on the front of the motor housing with the two holes in the rear guard. Make sure that the handle is up the top. Push the guard in firmly until the three knobs protrude through the holes. Secure the rear guard by reattaching the guard nut and turning it clockwise to tighten.
11. Slide the blade onto the motor shaft, making sure to match the protru-

sions on the shaft with the slots in the blade. Tighten the blade with the blade lock, turning it anticlockwise to tighten it securely.

12. Test the fan by rotating the blade with your hands, making sure that there is no contact with the nut. The fan blade should rotate freely.
13. Assemble the front guard to the rear guard and retighten the guard nut on rear guard to secure the guards together. Then assemble the safe screw and nut.
14. Insert the top bellows to the mist ring and the bottom bellows to the water tank cover.

Your new Misting Fan is now fully assembled.

OPERATING INSTRUCTIONS

NOTE: Before inserting the plug into a power outlet, make sure that the correct voltage being used corresponds to what is indicated on the rating label, and that the socket has an earth facility.

Remove the cable tie and unravel the cord set before operation. Connect the plug into an electrical socket and switch on at the wall.

CAUTION:

- Select a suitable location for the unit. Always choose a safe location in accordance to the safely recommendations outlined.that the socket has an earth facility.
- The fan should always be switched off when making any adjustments to the fan head angle.
- Always keep the unit upright.

Filling up the Water Tank:

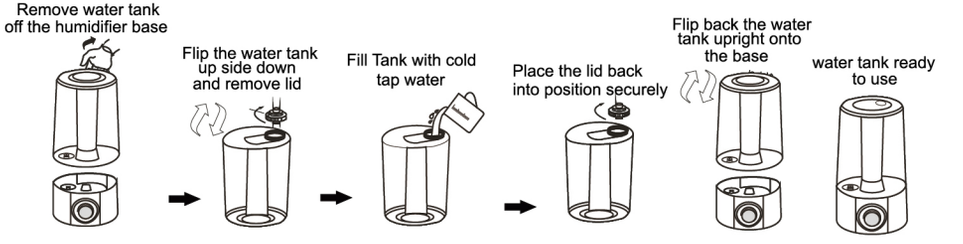

NOTE: Always leave enough water in water tank for misting.

1. Open the water tank packaging to check components, appearance, etc.
2. .Put the atomizer on the fan base cover, it should not be placed in the sunlight and damp places.
3. Take the water tank and turn it over, follow the “adding water” arrow to open the cover, add clean water.
4. Tighten the water tank cover by turning it clockwise after filling with water. Wipe the water droplets surrounded by water tank and install the water tank properly to the unit.
5. Insert the fan plug into the socket (220-240Vac ~ 50Hz power supply), turn on the mist switch, then mist will be sprayed, and the atomizer will start to work.
6. The volume of mist can be adjusted, depending on the room’ s humidity temperature (dryer the humidity is, the maximum of mist can be achieved).
7. When the water tank is without water; the safe device inside can turn off the atomizer circuit automatically, then no mist will spray out.

Operation Methods:

ON/OFF: Press once to turn the unit on. Indicator lights will illuminate. Press the button again, unit will be turned off.

SWING: Press once to engage auto swing. SWING: indicator light will illuminate .Press again for fixed direction.**SPEED:** Press to select fan speed; High-Medium-Low.

MODE: Press the button. Until will operate under irregular status according to pre-set program. Wind speed can be chosen from High to Low.

TIMER: Press the button to adjust the time 0.5 hours to 7.5 hours.

MIST: Press to turn on the mist. Before using atomizer function, add water into water tank (pic.1). The mist can be adjusted by the knob (pic.2). Press the button again, the atomizer will stop working.

CARE & CLEANING

NOTE: If the power cord set of this appliance becomes damaged, discontinue use. Repairs should be undertaken only by a qualified technician.

CAUTION: To avoid of electric shock, you must always switch off and unplug the unit before cleaning.

- Your appliance must be switched OFF via the main power supply and unplugged before proceeding with any cleaning.
- Clean the housing with a damp cloth, a vacuum cleaner or a dusting brush.
- We recommend lightly running a vacuum cleaner brush nozzle over the fan grill to remove any dust or dirt that may have accumulated.
- Never use flammable or abrasive cleaning agents such as benzene or spirits to clean the appliance.
- Never immerse the appliance in water!
- Avoid all other types of detergents, cleaners, solvents that may contain chemicals, which could damage parts of the unit.
- If the unit will not be used for a long period of time, store in a dry place.

SPECIFICATIONS

Model	Description	Voltage	Frequency	Wattage
HMIST40R	40cm Misting Pedestal Fan with Remote Control	220-240Vac	50Hz	75W

CUSTOMER SERVICE

Australian Customer Service

GAF Control (Sales) Pty Ltd

P.O Box 19

Altona North Victoria 3025

Phone: 1300 659 489

Hours: 9am-5pm (EST) Mon-Fri

www.gafcontrol.com.au

*This product may vary slightly to the product illustrated due to ongoing product development.